HYDAC INTERNATIONAL

Mobile Spin-On Filter MF/MFD

Flow rates up to 300 l/min
Pressure range up to 8 bar
Material: Aluminium / Sheet steel

MF/MFD mobile spin-on filters are designed for the filtration of fluids in low pressure, return and suction lines in hydraulic systems.

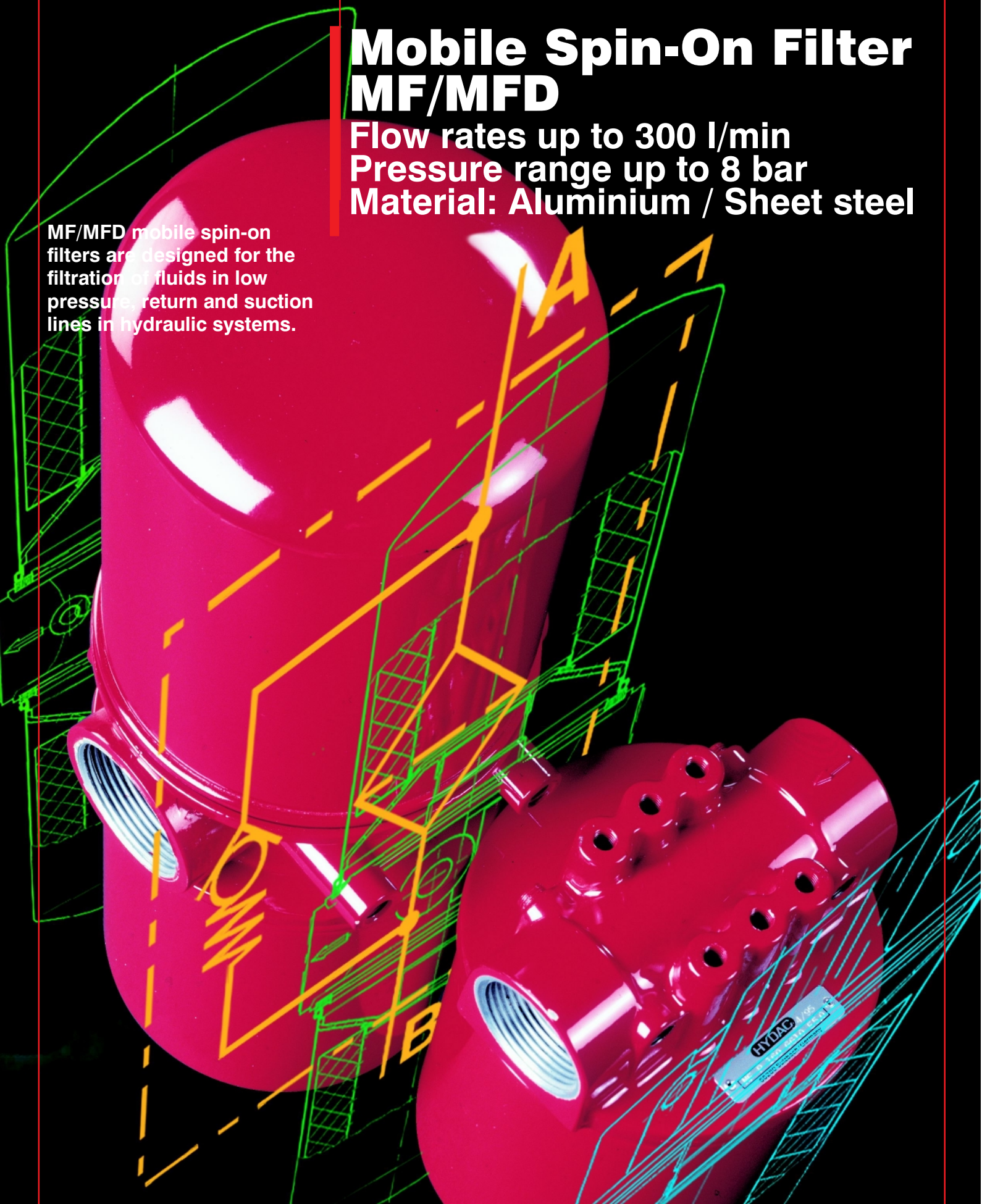

1. TECHNICAL SPECIFICATIONS

1.1. FILTER HOUSING

Construction

The mobile spin-on filter consists of a filter head with a built-in bypass valve and a screw-on filter cartridge.

1.2. FILTER ELEMENTS

MG: Cartridge connection thread to ISO 228
Sealing on the inside

MA: Cartridge connection UN thread
Sealing on the outside

MU: Cartridge connection UN thread
Sealing on the inside

Fluid compatibility
Suitable for mineral oils, lubrication oils, non-flam fluids, synthetic and rapidly biodegradable oils.

1.3. CLOGGING INDICATORS

VMF 0.2 UF .0

Type of indicator
VMF

Pressure setting
See point 2

Indicator type
E. = pressure gauge
F. = pressure switch
UE. = vacuum gauge
UF. = vacuum switch

Modification number
0 = the latest version is always supplied

For further details on clogging indicators, please see **brochure, no. E 7.050../..**

1.4. SEALS

Perbunan (=NBR)

1.5. SPECIAL MODELS AND ACCESSORIES

– Filter without bypass valve

1.6. SPARE PARTS

See Original Spare Parts List and Maintenance Instructions.

2. GENERAL

Mounting

As inline filter

Temperature range

-30 °C to +100 °C

Pressure setting of the differential pressure clogging indicator

Typ E:	0 to 16 bar
Typ F:	2 bar -0.2 bar 1.5 bar -0.2 bar
Typ UE:	0 to -1.0 bar
Typ UF:	-0.2 bar

Other pressure settings on request

Cracking pressure of the bypass valve

MF 80
Δp_o= 1.7 bar +10% (standard)

MF 160/180
Δp_o= 2 bar +10% (standard)
Δp_o= 0.2 bar (as suction filter) KB

MFD 160/180
Δp_o= 1.7 bar (standard)
Δp_o= 0.25 bar (as suction filter) KB

Other cracking pressures on request

Hydraulic symbol

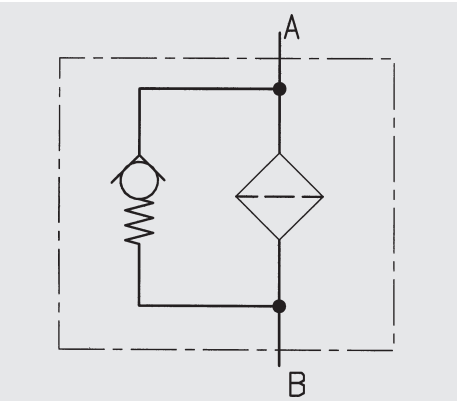

3. MODEL CODE

(also order example)

3.1. COMPLETE FILTER

MF BN 160 A G E 10 F 1 .X /-KB

Filter type
MF (all sizes) (1 element)
MFD (sizes 160 and 180) (2 elements)

Filter material of element
BN Betamicron®
P Paper

Housing material / Size
AL/sheet steel : 80, 160, 180

Operating pressure
A 8 bar (all sizes)

Type of cartridge connection (see tables under Point 4)
G thread to ISO 228 (G ¾, G1¼)
U UN thread (1-12 UNF, 1½x16 UN-2B)

Type and size of port

Type	Port	Filter size		
		80	160	180
C	G ¾	MF	–	–
E	G1 ¼	–	MF	MF
F	G1 ½	–	MFD	MFD

Filtration rating in µm
BN 3, 5, 10, 20
P 10

Type of clogging indicator
A without indicator, steel blanking plug in indicator port
E pressure gauge
F pressure switch
] pressure indicators
UE vacuum gauge
UF vacuum switch
] vacuum indicators
] for other clogging indicators see brochure no. E 7.050../..

Type code
0
1
2
3
4 see point 3.3
5
6
7
8

Modification number
X the latest version is always supplied

Supplementary details
KB blocked bypass valve
B. special bypass cracking pressure (B0.2 = 0.2 bar, B0.25 = 0.25 bar)
B1.7 always state when ordering MF 80
SO 348 operating pressure max. 0 bar

3.2. REPLACEMENT ELEMENT

0160 MA 010 BN

Size
0080, 0160, 0180

Type
MG (only for sizes 80 and 160)
MA (only for sizes 160 and 180)
MU (only for size 80)

Filtration rating in µm
BN: 3, 5, 10, 20 (20µm only for size 80)
P: 10

Filter material
BN, P

3.3. MOUNTING POSITION OF THE CLOGGING INDICATOR

MF 80 MF 160/180 MFD 160/180

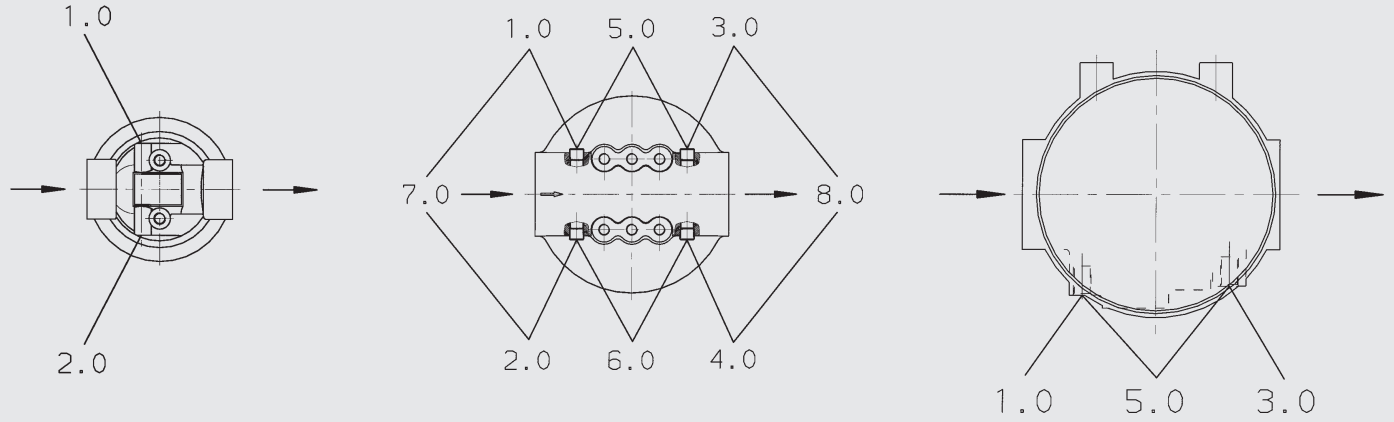

For MF filters

Type code	Mounting position of the clogging indicator	Application of the complete filter	Type of the indicator	Notes
0.0	Without clogging indicator	–	–	–
1.0	On filter inlet Left-hand side	Return line filter	Pressure indicator	–
2.0	On filter inlet Right-hand side	Return line filter	Pressure indicator	–
3.0	On filter outlet Left-hand side	Suction filter	Vacuum indicator	- Only for sizes 160 and 180: - with bypass cracking pressure 0.2 bar (…/-B0.2) - with blocked bypass valve (…/-KB)
4.0	On filter outlet Right-hand side	Suction filter	Vacuum indicator	Only for sizes 160 and 180: - with bypass cracking pressure 0.2 bar (…/-B0.2) - with blocked bypass valve (…/-KB)
5.0	On filter inlet and outlet Left-hand side	Pressure filter	Pressure indicator	–
6.0	On filter inlet and outlet Right-hand side	Pressure filter	Pressure indicator	–
7.0	On filter inlet Right-hand and left-hand sides	Return line filter	Pressure indicator	–
8.0	On filter inlet Right-hand and left-hand sides	Suction filter	Vacuum indicator	Only for sizes 160 and 180: - with bypass cracking pressure 0.2 bar (…/-B0.2) - with blocked bypass valve (…/-KB)

For MFD filters

Type code	Mounting position of the clogging indicator	Application of the complete filter	Type of the indicator	Notes
0.0	Without clogging indicator	–	–	–
1.0	On filter inlet Right-hand side	Return line filter	Pressure indicator	–
3.0	On filter outlet Right-hand side	Suction filter	Vacuum indicator	Only for versions: - with bypass cracking pressure 0.2 bar (…/-B0.2) - - with blocked bypass valve (…/-KB)
5.0	On filter inlet and outlet Left-hand side	Pressure filter	Pressure indicator	

4. FILTER SPECIFICATIONS

Type of filter	Inlet / outlet port	Cartridge connection	Weight [kg] incl. element
MF 80	G ¾	G ¾ 1 – 12 UNF	0.9
MF 160	G 1¼	G 1¼, 1½x16 UN-2B	2.3
MF 180	G 1¼	1½x16 UN-2B	2.8
MFD 160	G 1½	G 1¼, 1½x16 UN-2B	3.7
MFD 180	G 1½	1½x16 UN-2B	4.5

4.1. CARTRIDGE SELECTION TABLE

Filter type				MF				MFD	
Port type				AGC	AUC	AGE	AUE	AGF	AUF
Cartridge				Thread to DIN 228 (Sealing on inside)	UN thread (Sealing on inside)	Thread to DIN 228 (Sealing on inside)	UN thread (Sealing on outside)	Thread to DIN 228 (Sealing on inside)	UN (Sealing on outside)
Size	Type	Filt. rating	Material of filter						
0080	MU	010	P	–	●	–	–	–	–
0080	MG	010	P	●	–	–	–	–	–
0160	MG	010	P	–	–	●	–	●	–
0180	MA	010	P	–	–	–	●	–	●
0080	MG	020	BN	●	–	–	–	–	–
0160	MA	003	BN	–	–	–	●	–	●
0160	MA	005	BN	–	–	–	●	–	●
0160	MA	010	BN	–	–	–	●	–	●
0160	MA	020	BN	–	–	–	●	–	●
0180	MA	003	BN	–	–	–	●	–	●
0180	MA	005	BN	–	–	–	●	–	●
0180	MA	010	BN	–	–	–	●	–	●
0180	MA	020	BN	–	–	–	●	–	●

● Type possible
– Type not possible

4.2. CHANGING THE CARTRIDGE

Filter cartridge type MG/MU:

Unscrew filter cartridge (using a strap wrench if necessary). Lubricate seal on the new cartridge (see sectional view below, right-hand side). Screw in new cartridge until contact is made with the sealing surface. Then hand-tighten. Check for leakage and tighten further if necessary.

Filter cartridge type MA:

Unscrew filter cartridge (using a strap wrench if necessary). Lubricate new seal and fit into filter head (see sectional view below, left-hand side. Screw in new cartridge until contact is made with the sealing surface. Then hand-tighten. Check for leakage and tighten further if necessary.

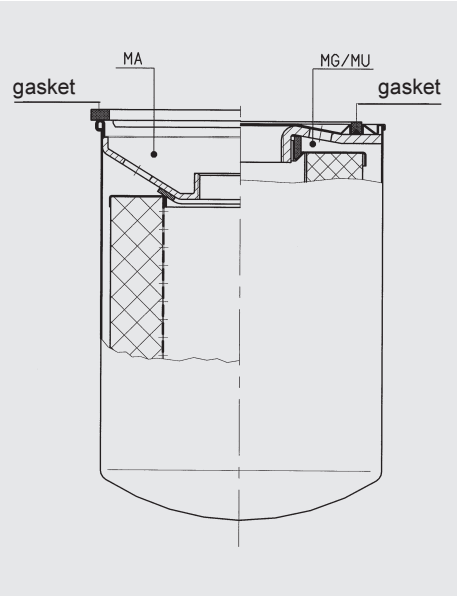

5. FILTER CALCULATION / SIZING

The total pressure drop of a filter at a certain flow rate is the sum of the housing Δp (including change-over valve!) and element Δp.

The pressure drop can be determined either with the aid of our Filter Sizing Program FSP, which is available free of charge, or by using the following graphs.

It must be stressed that all of the technical documentation from HYDAC Filtertechnik always states the pressure drop of the complete filter, i.e. including the change-over valve.

5.1. ΔP-Q HOUSING GRAPHS TO ISO 3968

The housing graphs apply to mineral oil with a density of 0.86 kg/dm³ and a viscosity of 30 mm²/s.

In this case, the differential pressure changes proportionally to the density.

MF 80

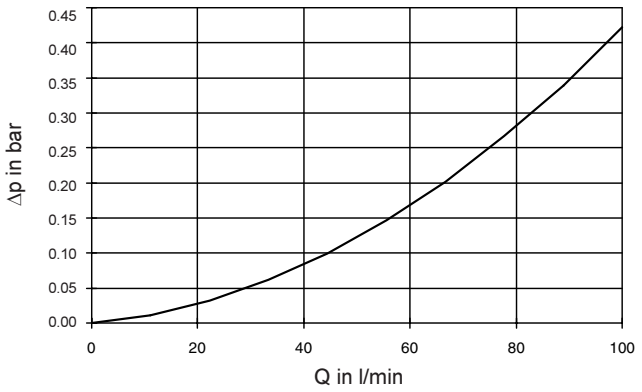

MF 160/180

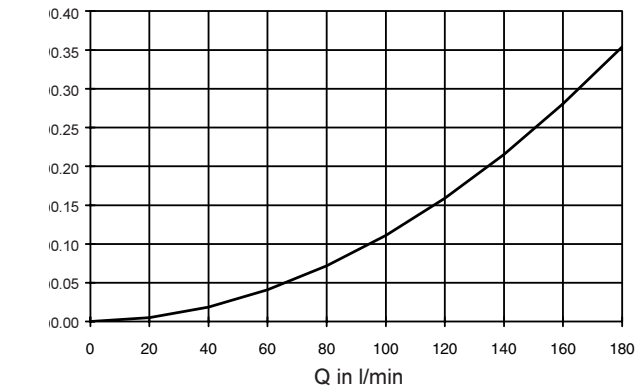

MFD 160/180

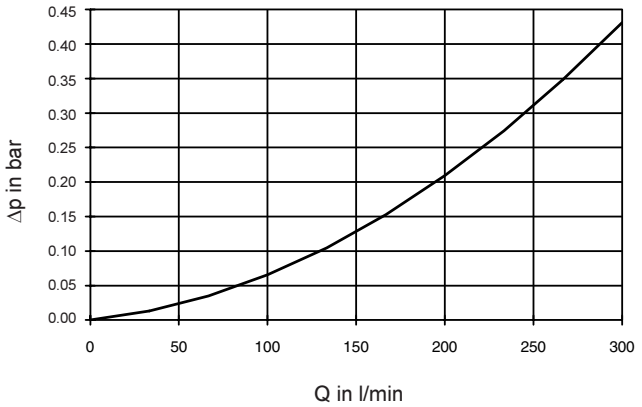

5.2. GRADIENT COEFFICIENT FOR ELEMENT PRESSURE DROP

The gradient coefficients apply to mineral oil with a kinematic viscosity of 30 mm²/s.

Size	Filtration rating 3µm	5µm	10µm	20µm
0080 MU...P	–	–	0.0015	–
0160 MU...P	–	–	–	0.002
0160 MG...P	–	–	0.0016	–
0180 MA...P	–	–	0.0011	–
0160 MA...BN	0.0075	0.005	0.0036	0.0026
0180 MA...BN	0.005	0.0023	0.0021	0.0013

5.3. EXAMPLE

General

$$\Delta p_{total} = \Delta p_{housing} + \Delta p_{element} \cdot \frac{\text{viscosity (mm}^2\text{/s)}}{30\ \text{mm}^2\text{/s}}$$

$\Delta p_{housing}$ = determined in accordance with Point 5.1.

$\Delta p_{element}$ = flow rate x gradient coefficient

Example

System parameters:

Q = 125 l/min; MF 160 with BN cartridge (10 µm); Viscosity = 46 mm²/s

$\Rightarrow \Delta p_{housing}$ = 0.17 bar (MF 160)

$\Delta p_{element} = 0.45\ \text{bar} \times \frac{46\ \text{mm}^2\text{/s}}{30\ \text{mm}^2\text{/s}} = 0.69\ \text{bar}$

$\Delta p_{total} = \Delta p_{housing} + \Delta p_{element} = 0.86\ \text{bar}$

5.4 CALCULATION CRITERIA

Filters should be calculated on the basis of a total differential pressure with clean element and at operating temperature; for use as:

Suction filter: 0.03 – 0.05 bar
Return line filter: 0.3 – 0.5 bar
Pressure filter: 0.3 – 0.5 bar

However, cold start conditions must be taken into account.

For ease of calculation, our FSP Filter Sizing Program is available and can be downloaded from our internet website (www.hydac.com).

6. DIMENSIONS

6.1. MF 80

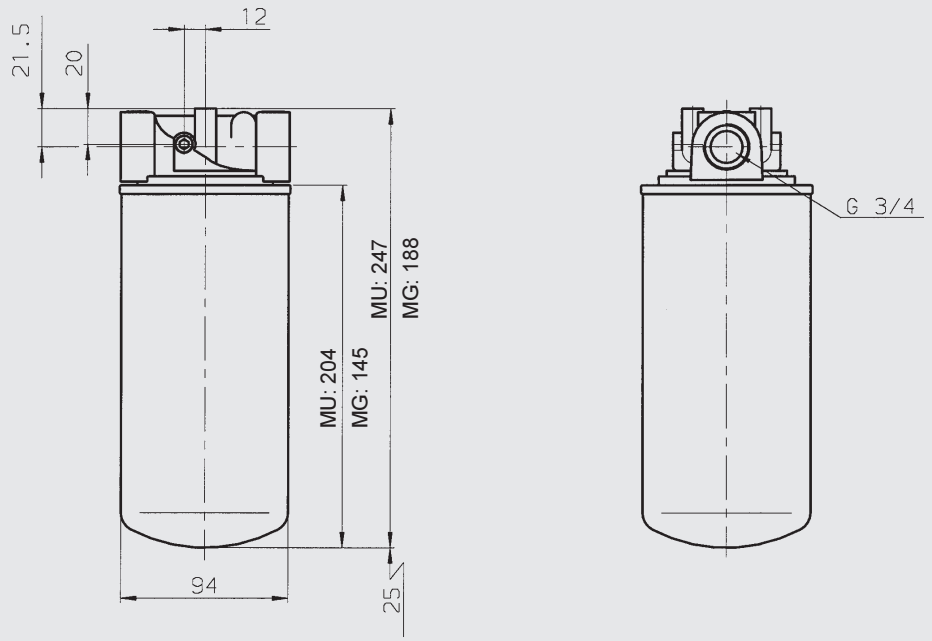

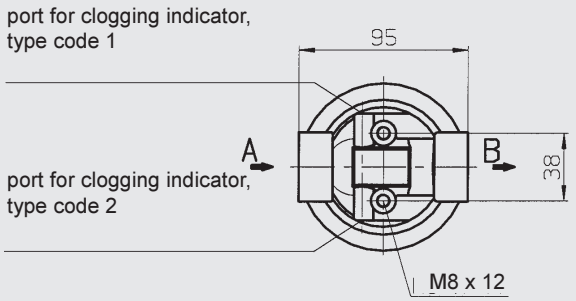

6.2. MF 160/180

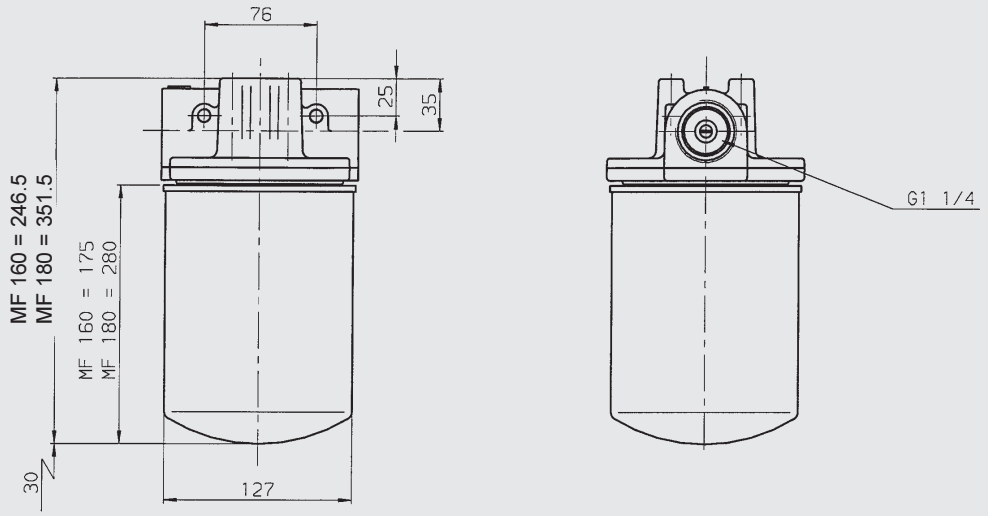

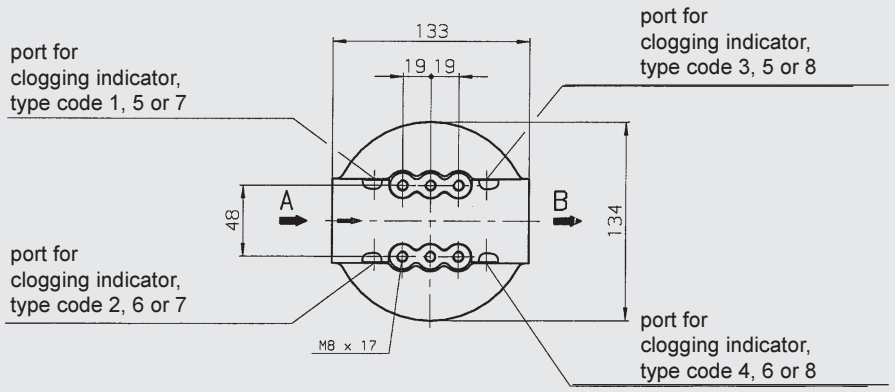

6.3. MFD 160 - 180

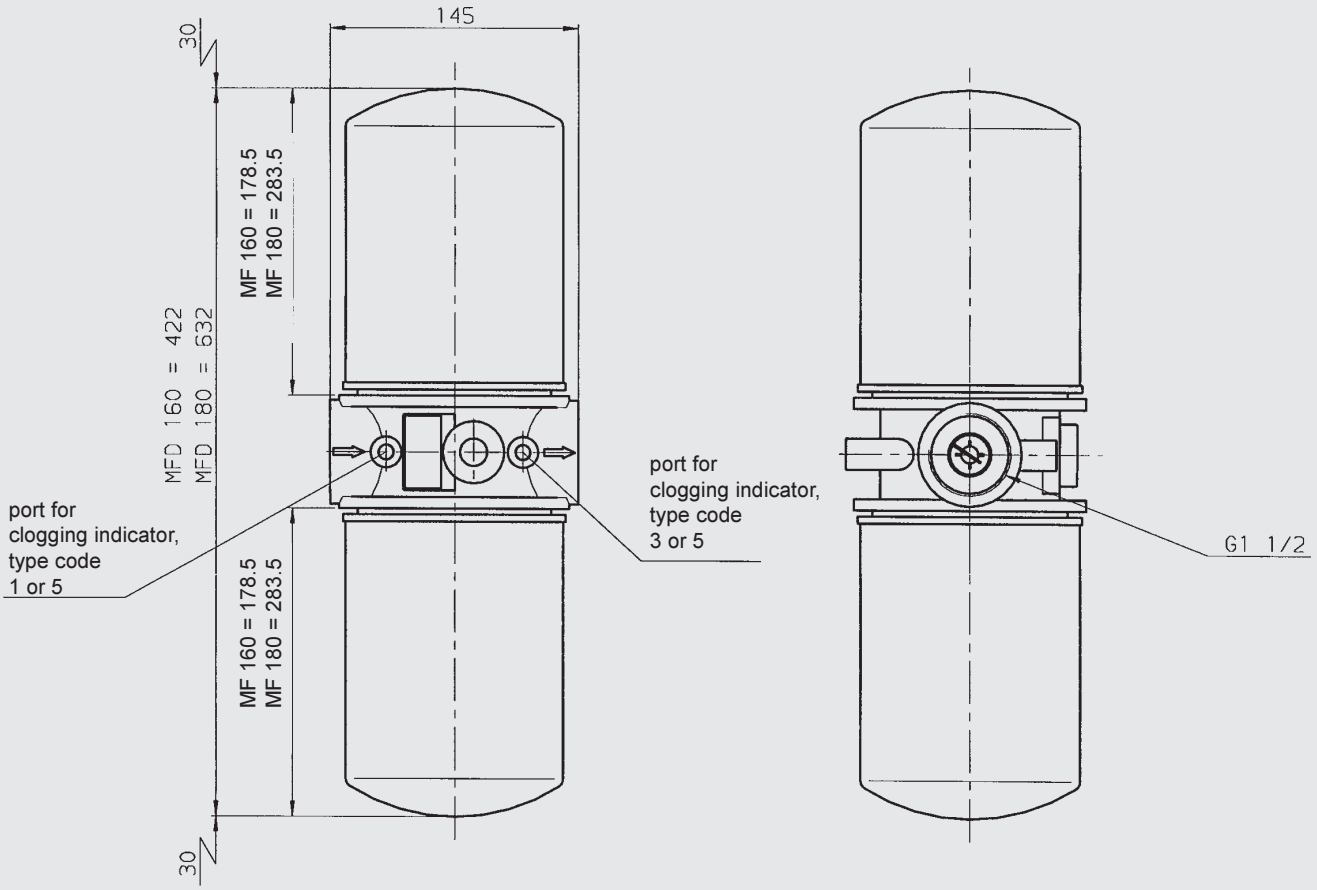

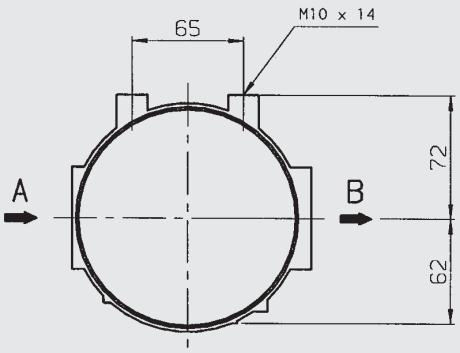

7. NOTE

The information in this brochure relates to the operating conditions and applications described.
For applications or operating conditions not described, please contact the relevant technical department.
Subject to technical modifications.

NOTES